PROJECT 27: Design and Analysis of R2R Ladder DAC by using Cadence Virtuoso

A Comprehensive Study of Analog Circuits

By: Priya Chaudhary, Astitva Johri and
Bhavya Solanki

Chapters:

List of Figures……..…… 3

1. Introduction …….. 4
2. Brief Description…… 5
3. Circuit Design……. 6-7
   3.1 Schematic Design……... 6
   3.2 Simulation Setup...…….. 6
   3.3 Transient Response……. 6-7
4. Simulation Results…….. 8
5. Advantages and Disadvantages…….. 9
   5.1 Advantages……. 9
   5.2 Disadvantages……. 9
6. Conclusion…….. 10
7. Frequently Asked Questions (FAQs)…….. 11

LIST OF FIGURES

Figure 3.1 Symbol of R2R Ladder DAC ……..…... 7

Figure 3.2 Circuit of R2R Ladder DAC …….…... 7

Figure 4.1 Simulation Results of R2R Ladder DAC ……... 8

1. INTRODUCTION

Digital-to-Analog Converters (DACs) are essential components in modern electronics, bridging the gap between digital systems and analog signal processing. DACs play a pivotal role in applications such as audio processing, waveform generation, and instrumentation, where digital signals must be converted into smooth analog waveforms.
Among various DAC architectures, the **R2R Ladder DAC** is widely recognized for its simplicity, accuracy, and ease of implementation. The R2R ladder structure consists of a repeating sequence of resistors with values R and 2R, forming a network that efficiently performs weighted summation of digital inputs.

This document provides a comprehensive guide to the **design and analysis of an R2R Ladder DAC using Cadence Virtuoso**, a powerful electronic design automation (EDA) tool. Cadence Virtuoso offers an integrated environment for schematic design, simulation, and layout, making it ideal for modeling and evaluating DAC performance. Through this study, we aim to understand the working principles, advantages, disadvantages, and practical considerations associated with R2R Ladder DAC design.

2. BRIEF DESCRIPTION

The **R2R Ladder DAC** is based on a resistor ladder network that utilizes a combination of two resistor values: **R** and **2R**. The fundamental principle behind the R2R ladder is that it creates a current division that corresponds to the binary-weighted values of the digital input. The network effectively converts the digital input into a proportional analog voltage by summing the current contributions from each bit.

The R2R network consists of multiple stages, each corresponding to a bit in the digital input. At each stage, the input bit determines whether the voltage is connected to a reference voltage (**Vref**) or ground (**GND**). The resulting voltage at the output node is a weighted sum of all input bits, following the equation: $V_{out} = V_{ref} \times \sum_{i=0}^{n-1} \frac{D_i}{2^{i+1}}$

where:

- **Vref** is the reference voltage.
- **Di** represents each bit of the digital input (1 or 0).
- **n** is the total number of bits in the input.

Characteristics of R2R Ladder DAC:-

- **Linearity**: The R2R structure ensures a highly linear response if resistors are matched precisely.
- **Speed**: The conversion speed is primarily determined by the resistance and capacitance in the circuit, influencing the response time.
- **Power Consumption**: Low, as only passive resistors are used.
- **Scalability**: The design can be extended for higher bit resolutions without significant complexity.

3. CIRCUIT DESIGN

3.1 Schematic Design

Step 1: Open Cadence Virtuoso and create a new schematic cell.

Step 2: Place resistors of values R and 2R to form the R2R ladder network.

Step 3: Add MOSFETs as switches to control the binary inputs.

Step 4: Connect the digital inputs to the switches, ensuring proper binary-weighted summation.

Step 5: Connect the output node to a summing amplifier or buffer to stabilize the signal.

Step 6: Verify the connections and check for design rule violations.

3.2 Simulation Setup

To analyze the performance of the **R2R Ladder DAC**, the following simulation setup is configured in **Cadence Spectre**:

- **Transient Analysis:** Used to observe the output waveform as the digital inputs change over time.
- **DC Analysis:** Evaluates the steady-state output voltage for different input combinations.
- **Parameter Sweep:** Simulates different resistor values to analyze mismatch effects.
- **Noise Analysis:** Determines the impact of thermal and flicker noise on output precision.

3.3 Transient Reaponse

The transient response simulation provides insight into how the R2R Ladder DAC converts binary input signals into an analog output waveform. The expected results include:

- **Smooth Analog Transitions:** As binary inputs change, the output voltage should smoothly transition between discrete voltage levels.

- **Step Size Verification:** The difference between successive output voltages should match the theoretical resolution.
- **Linearity Check:** The output should follow a uniform step increase corresponding to binary increments.
- **Settling Time:** The time taken for the output to stabilize after an input change.

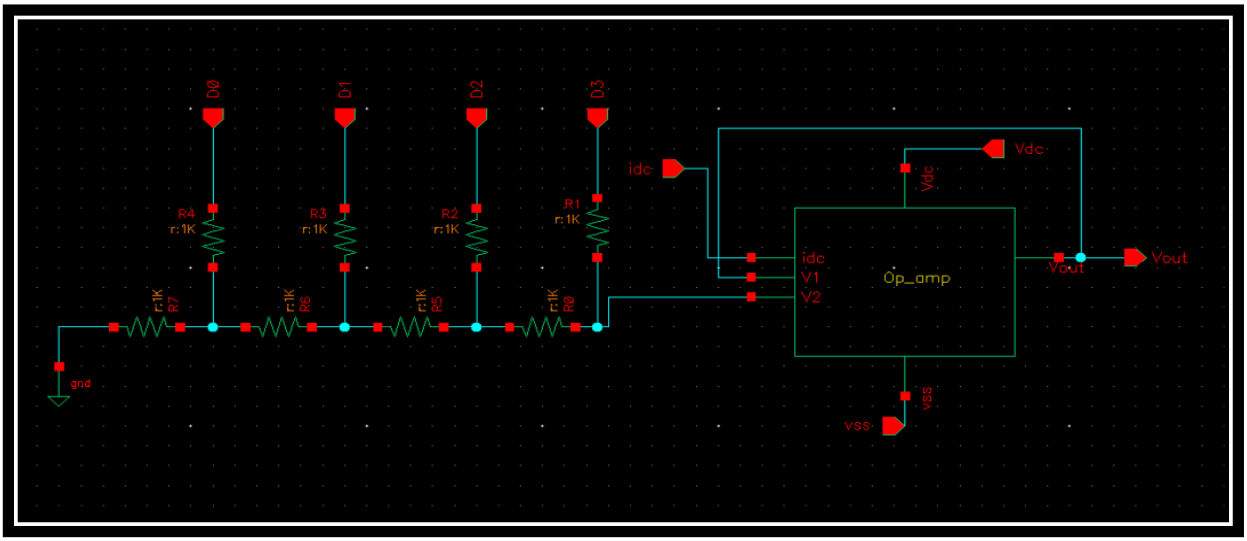

Figure 3.1 Symbol of R2R Ladder DAC

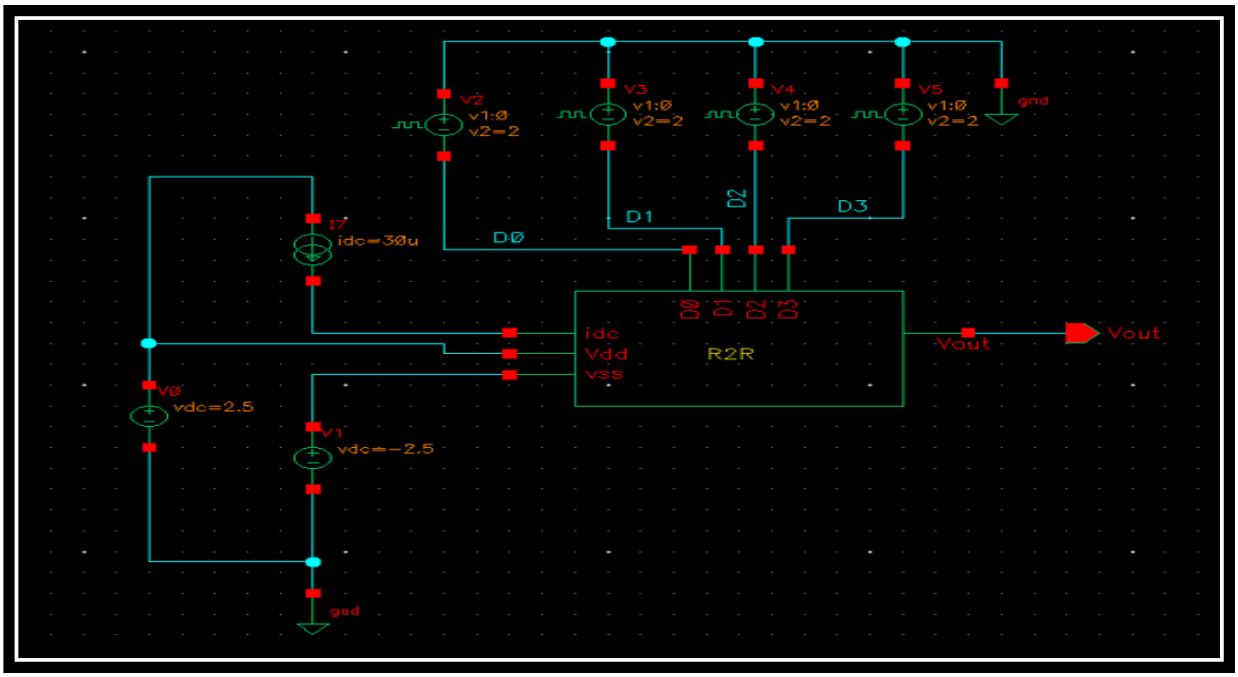

Figure 3.2 Circuit of R2R Ladder DAC

4. SIMULATION RESULTS

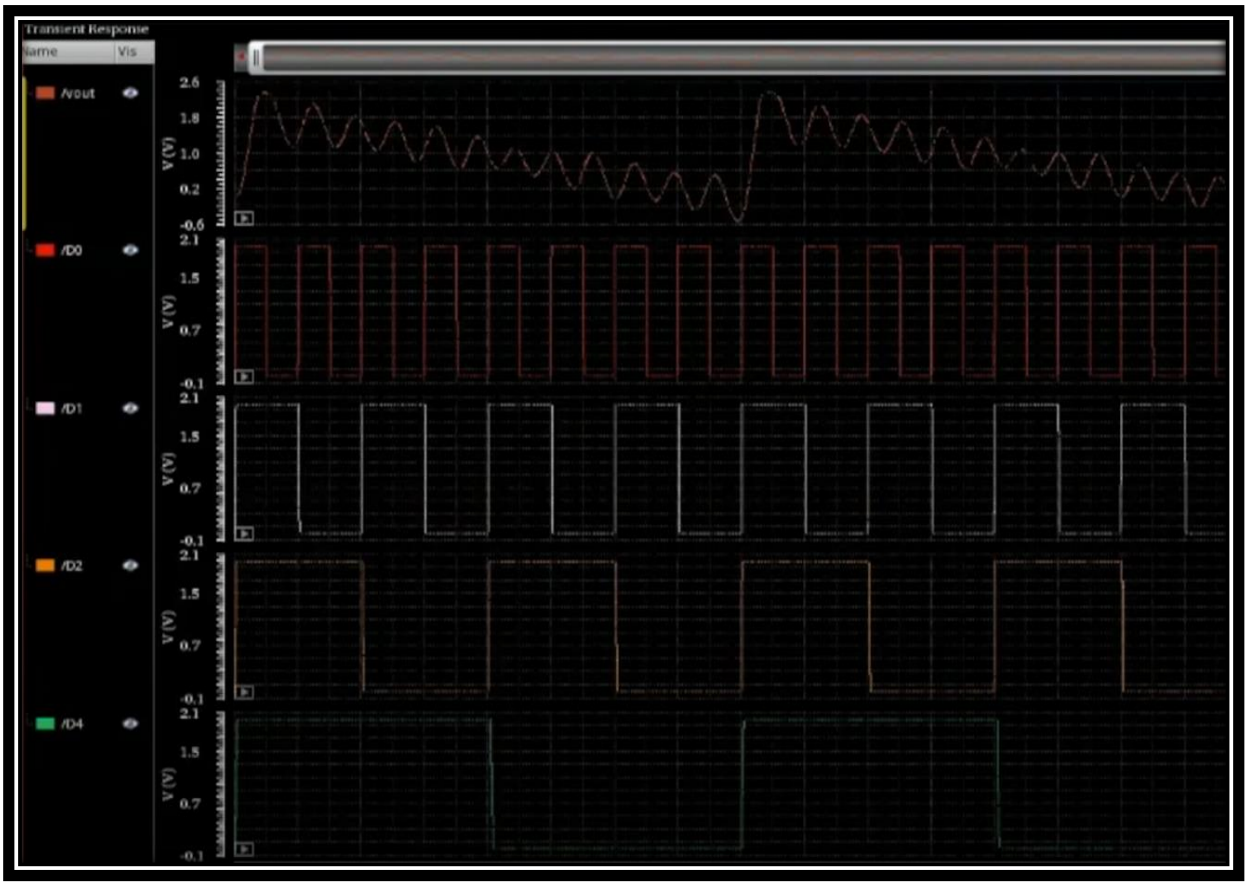

Figure 4.1: Simulation Results of R2R Ladder DAC

5. ADVANTAGES AND DISADVANTAGES

5.1 Advantages:-

1. **Simple and Scalable:** Uses only resistors and switches, making it easy to design and scale for higher bit resolutions.
2. **Low Power Consumption:** Since it uses passive components, the power requirement is minimal.
3. **Fast Conversion Rate:** The ladder structure ensures uniform time response for any digital input combination.
4. **High Linearity:** The resistor-based approach provides a linear voltage output.

5.2 Disadvantages:-

1. **Precision Issues:** Resistor matching is critical, requiring high-precision fabrication.
2. **Limited Accuracy:** Any resistor mismatch affects output accuracy and causes non-linearity.
3. **Load Dependency:** Output impedance varies with different digital input codes.
4. **Parasitic Effects:** The presence of parasitic capacitances may affect high-speed performance.

6. CONCLUSION

The **R2R Ladder DAC** is an essential component in many electronic applications, offering a simple and efficient method for digital-to-analog conversion. Its structure, relying solely on resistors and switches, makes it a cost-effective and scalable solution. However, achieving high accuracy requires precise resistor matching and careful circuit layout to minimize parasitic effects.

By utilizing **Cadence Virtuoso**, designers can model, simulate, and refine R2R Ladder DACs with high accuracy. The software allows engineers to analyze performance metrics such as linearity, power consumption, and speed, ensuring optimal circuit functionality. Additionally, by understanding the limitations and compensating for resistor mismatches, engineers can enhance DAC accuracy for high-performance applications.

In summary, the **R2R Ladder DAC** remains a fundamental building block in mixed-signal electronics. Its application in audio processing, instrumentation, and communications underscores its importance in modern digital systems. Through proper design and analysis using **Cadence Virtuoso**, engineers can optimize DAC performance and integrate it effectively into advanced electronic systems.

7. FREQUENTLY ASKED QUESTIONS (FAQs)

Q1. What is the purpose of an R2R ladder in a DAC?

Answer: The R2R ladder acts as a voltage divider that converts binary digital input into an equivalent analog output voltage.

Q2. Why do we use Cadence Virtuoso for designing an R2R DAC?

Answer: Cadence Virtuoso provides an industry-standard platform for schematic design, layout, and simulation, allowing accurate analysis of the DAC's performance.

Q3. How does resistor mismatch affect the DAC performance?

Answer: Any deviation in resistor values leads to non-linearity in the output, reducing the accuracy of digital-to-analog conversion.

Q4. How can we improve the accuracy of an R2R Ladder DAC?

Answer: Using high-precision resistors, calibration techniques, and trimming methods can help improve accuracy.

Q5. What are the applications of R2R Ladder DAC?

Answer: Used in audio signal processing, waveform generation, digital audio systems, and communication systems requiring analog signal conversion.